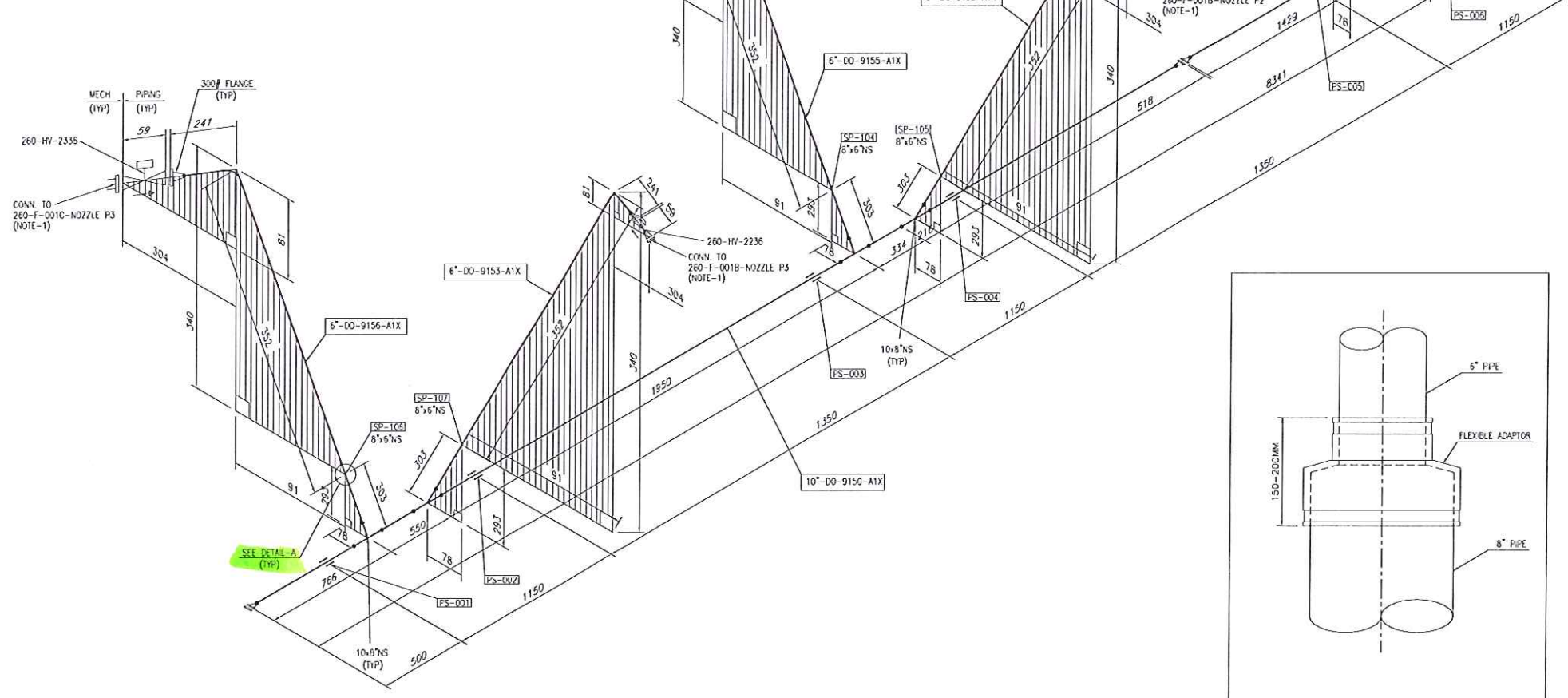


SP-102 TO 107 DETAIL

DETAIL-A